Current part is item (1) on diagram. Available at www.oshkoshequipment.com

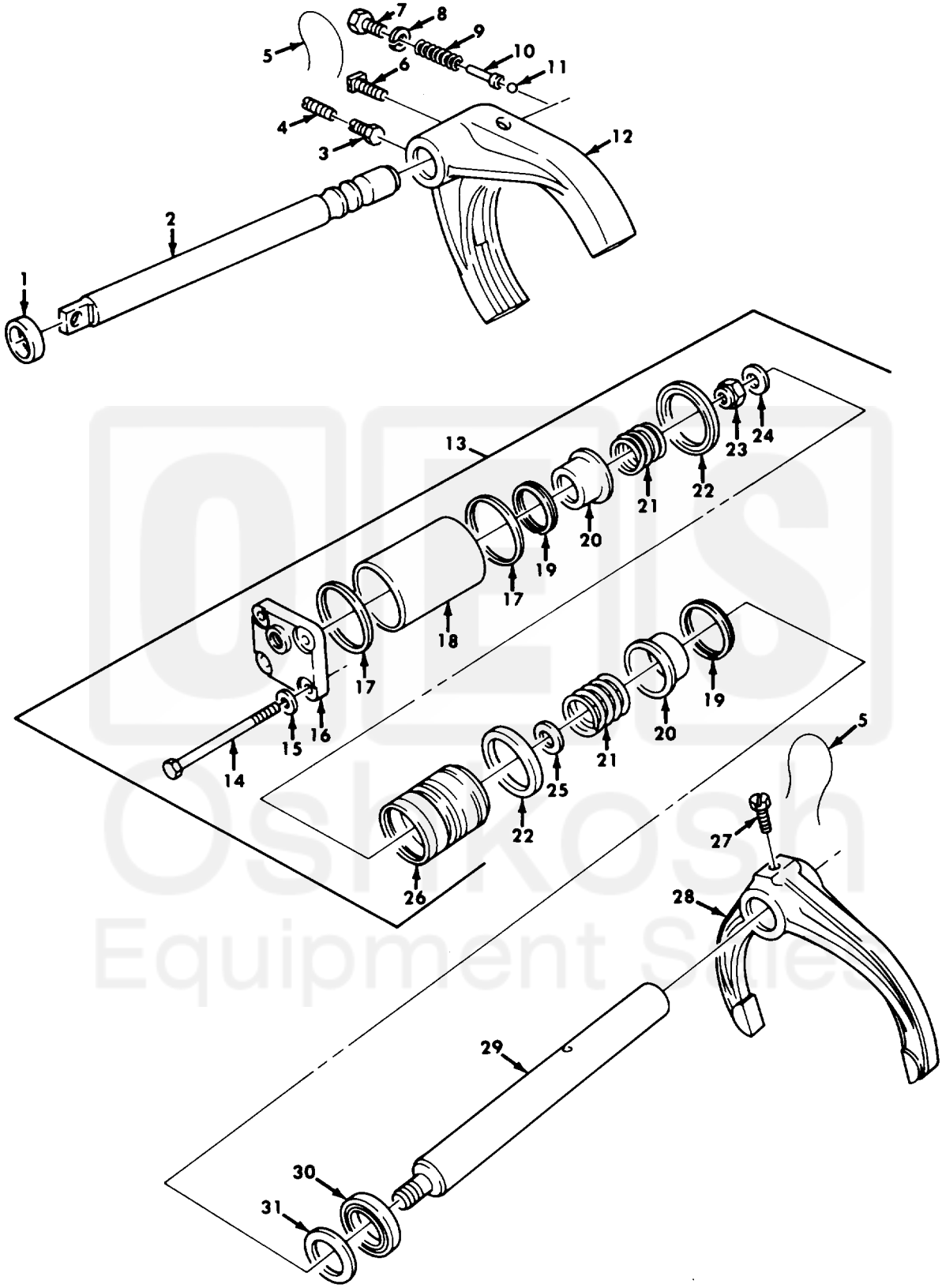

Figure 148. Transfer Shift Mechanisms.

Current part is item (1) on diagram. Available at www.oshkoshequipment.com

Current part is item (1) on diagram. Available at www.oshkoshequipment.com

(1) ITEM NO	(2) SMR CODE	(3) CAGEC	(4) PART NUMBER	(5) DESCRIPTION AND USABLE ON CODES(UOC)	(6) QTY
				GROUP 0803 GEAR SHIFT,VACUUM BOOSTER AND CONTROLS	
				FIG.148 TRANSFER SHIFT MECHANISMS	
1	PAHZZ	19207	10938287	SEAL,PLAIN ENCASED	1
2	PAHZZ	19207	7998650	SHAFT,SHOULDERED	1
3	PAHZZ	19207	7375283	BOLT,MACHINE	1
4	PAHZZ	96906	MS51963-139	SETSCREW	1
5	MHHZZ	96906	MS20995F47	WIRE,NONELECTRICAL MAKE FROM WIRE, P/N MS20995F47	1
6	PAHZZ	19207	7521390	SETSCREW	1
7	PAHZZ	19207	7346774	BOLT,MACHINE	1
8	PAHZZ	96906	MS35333-44	WASHER,LOCK	1
9	PAHZZ	19207	7521387	SPRING,HELICAL,COMP	1
10	PAHZZ	19207	5143782	PLUNGER,SHIFTER SHA	1
11	PAHZZ	96906	MS19061-20013	BALL,BEARING	1
12	PAHZZ	19207	7748586	SHIFTER FORK	1
13	PAFFH	19207	7346756	CYLINDER ASY TRANSF	1
14	PAFZZ	96906	MS90728-20	.SCREW,CAP,HEXAGON H	4
15	PAFZZ	19207	8327009	.WASHER,KEY	4
16	PAFZZ	19207	8758298	.COVER,ACCESS	1
17	PAFZZ	19207	10913209	.SPACER,RING	2
18	XAFZZ	19207	8758292	.CYLINDER	1
19	XAFZZ	19207	8758296	.RING	2
20	XAFZZ	19207	8758291	.RETAINER	2
21	PAFZZ	19207	8758293	.SPRING,HELICAL,COMP	2
22	PAFZZ	19207	8758294	.SEAL,TRANSFER ENGAG	2
23	PAFZZ	96906	MS21044N7	.NUT,SELF-LOCKING,HE	1
24	XAFZZ	19207	11621033	.WASHER	1
25	PAFZZ	19207	8758299	.WASHER,FLAT	1
26	XAFZZ	19207	8758295	.PISTON	1
27	PAHZZ	19207	7521391	SETSCREW	1
28	PAHZZ	19207	7375289	SHIFTER FORK	1
29	PAHZZ	19207	7346803	SHAFT	1
30	PAFZZ	19207	7375282	PACKING,PREFORMED	1
31	PAFZZ	76894	1263	WASHER,FLAT	1
				END OF FIGURE	

Current part is item (1) on diagram. Available at www.oshkoshequipment.com